SIMAG

Target simulator for performance tests of thermal imagers

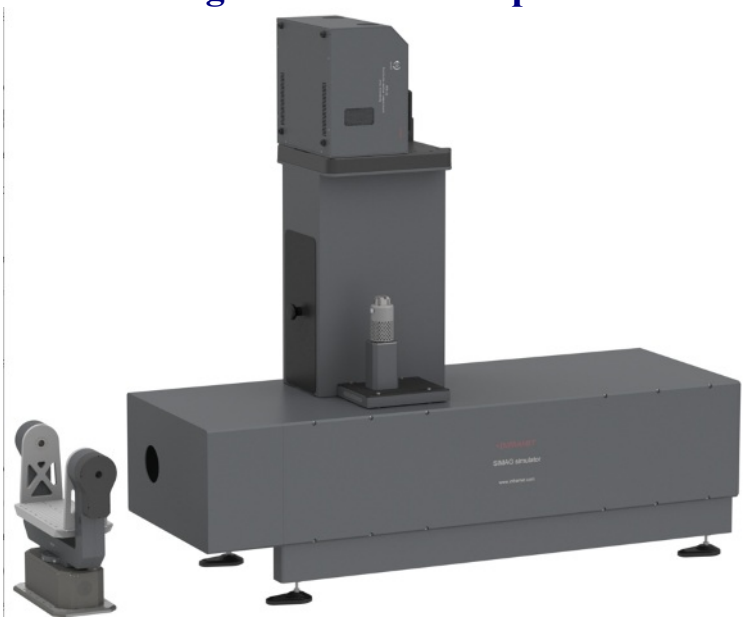

Fig. 1. SIMAG simulator

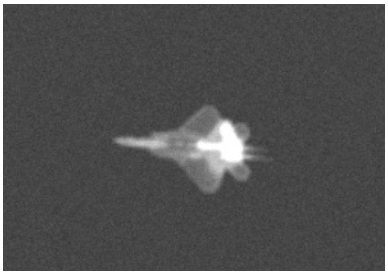

Fig. 2. Exemplary target simulated by Simag simulator

1 What is Simag?

Majority of target simulators offered by Inframet (Simit, Simat, Sim790, Sipek, Suvir) project images of simple shape targets (circle, rhombus, square) that only when seen from long distance resemble real airborne/space targets.
In contrast, Simag simulator can project complex shape images of airborne/space targets like aircraft, helicopters or asteroids: targets of complex shape and non-uniform radiation intensity.
Further on, there is also a difference of spectral range between Simag and other target simulators. Typical Inframet simulators work mainly in SWIR-MWIR spectral band when Simag works in MWIR-LWIR range. This change creates possibility to test performance of typical thermal imagers that operate in MWIR/LWIR range.
Finally, in contrast to typical simulators Simag is equipped with a gimbal type stage that enables angular rotation of tested imager. This feature enables continuous regulation of angular position of targets simulated by Simag.
Simag is a general purpose simulator. It can be used for both for astronomy applications (simulation of dynamic astronomical objects), military applications (simulation of aircraft/helicopter targets), or scientific applications (performance tests of thermal imagers against simulated target).

2 Simag versus IR scene image projectors

In contrast to modern military grade infrared scene image projectors, SIMAG enables simulation of only relatively simple scenarios: single/two static/dynamic targets on an uniform background when IR scene image projectors can project images of dozen of targets on non uniform background. However, SIMAG offers precision regulation of both radiance intensity and spectrum of simulated targets that is important in many scientific applications. In addition, price of SIMAG is lower comparing to infrared scene projectors.

3 How Simag works?

SIMAG projects into direction of tested EO system a fused image combined from two sub-images:

1. image of a primary target (complex shape, non uniform radiation intensity) of variable angular size and variable radiation intensity,
2. image of a secondary (simple shape, uniform intensity) target. Step regulation of angular size. Variable regulation of radiation intensity. Switching ON/OFF of this target is time-controlled. It is possible to regulate angular position of secondary target relative to the primary target.
3. Angular position of simulated targets relative to tested imager can be regulated due to rotation of tested imager.

4 Typical tested system

Table 1. Main parameters of typical Simag system

Typical tested IR system	
Type of EO system	Thermal imager
Maximal aperture of optics of tested IR system	90 [mm]
Typical spectral band	MWIR or LWIR
Height of optical axis of tested IR system	no more than 150 mm

5 Simulated scenarios

Simag enables four main simulation scenarios as in table below

Table 2.

Simulated scenarios	
Simulated scenarios	1)static primary complex target of regulated angular size and radiometric intensity 2)static secondary simple-shape target (several pinhole targets) of regulated radiometric intensity 3) secondary target/targets of regulated angular position relative to primary target (primary target ejecting dynamic secondary target/targets) 4)dynamic primary/secondary targets (angular position of both targets is regulated using tested imager on gimbal platform)
Type of background	Quasi uniform
Field of projection	Angular size of simulated scenery is determined by max rotation range of tested imager located on gimbal platform

6 Main blocks

SIMAG simulator is built from seven main blocks: 1) primary image generator, 2) secondary image generator, 3)primary collimator, 4)secondary collimator, 5)image combiner, 6)gimbal rotation platform, 7)PC/software.
The first block generate image of the primary target at focal plane of primary collimator. The second block generate image of secondary target at focal plane of secondary collimator. The blocks 3-4 project images of primary/secondary targets simulating infinity located targets.
The fifth block serves two functions: 1)combining/fusion of images projected by two collimators, 2)regulation of angular position of simulated secondary target relative to primary target.
The sixth block enables regulation of angular position of both targets simulated relative to tested imager located at the gimbal platform.
The seventh block is practically PC with software that control settings of Simag: radiation intensity of simulated targets, type of simulated target, angular position of both targets.
The first six blocks are integrated. Therefore from mechanical point of view SIMAG is delivered as a set of two blocks: Simag base block and PC/software.

6.1 Primary image generator

Primary image generator is built as a set of modules:

1. MTB-2D blackbody,
2. MRW-8D rotary wheel
3. set of primary targets.

MTB blackbody irradiates one of primary targets (active target) located at MRW wheel enabling regulation of irradiation intensity. The MRW block enables fast exchange of the targets.
Set of primary targets enable simulation of primary targets of different shape and different angular size (simulation of the same target at different distance.

Table 3. Parameters of MTB blackbody

Parameter	Value
MTB-2 blackbody	
Aperture	50× 50 mm
Total temperature range	ambient+5°C to +550°C
Recommended temperature range	+70°C to +550°C
Set point and resolution	0.01ºC
Emissivity	0.96±0.01

6.2 Secondary image generator

Secondary image generator is built as a set of modules:

1. BHIR-1D radiation source ,
2. TS5 manual target slider,
3. TSH5 target shutter
4. set of secondary targets.

BHIR-1D radiation source irradiates one of secondary targets located at focal plane of secondary collimator enabling ling regulation of irradiation intensity up to high temperatures (about 1200C). The TS1 slider enables fast exchange of the targets.

Set of secondary targets change of configuration of a group of pinhole targets (possible change of pinhole diameter and location of pinholes).

Table 4. Parameters BHIR radiation source

Parameter	Value
BHIR-1D radiation source	
Aperture	Diameter: at least 22mm
Total temperature range	+100°C to 1000°C
Set point and resolution	2ºC
Emissivity	0.88±0.08

6.3 Primary collimator

Primary collimator is built using optics of typical CDT10100HR collimator. It projects image of primary target located at collimator focal plane.

Table 5.

Parameter	Value
Focal lenght	1000mm
transmission	MWIR: 0.92 LWIR: 0.93
FOV	At least 2.3 degrees

6.4 Secondary collimator

Secondary collimator is identical as primary collimator.

6.5 Image combiner

This block serves two functions: 1)combining/fusion of images projected by two collimators, 2)regulation of angular position of simulated secondary target relative to primary target. It is built as a set of two mirrors that can be rotated: one azimuth rotation, the second elevation rotation.

The first mirror partially overlaps (about 50%) of aperture of the primary collimator. Therefore tested imager can see:
1)direcly radiation emitted by primary collimator (about 50%) of aperture of the collimator)
2) indirectly via IC image combiner see aperture of the secondary collimator.

Table 6. Parameters of image combiner

Parameters	Value
Main function	1)image fusion, 2)rotation of image of secondary target relative to image of primary target
Image fusion method	Image combiner mirror overlaps about 50% of aperture of primary collimator
Transmission	MWIR: 0.46 LWIR: 0.47
Main blocks	Two flat mirrors
Type of relative regulation of angular coordinate of secondary target	Continuous regulation by mirror of image combiner (both azimuth and elevation)
Range of relative regulation	Azimuth: at least ±2° Elevation: at least ±2°
Max speed of relative regulation	at least 2°/sec
Resolution of relative regulation	Not worse that 0.01°
Regulation control type	PC, software

6.6 Rotation gimbal

This block enables regulation of angular position of both targets simulated relative to tested imager located at the gimbal platform.

Table 7.

Parameter	Value
Type of absolute regulation of angular coordinates of both targets	Continuous regulation by rotation of tested imager located at gimbal platform
Range of absolute regulation of angular coordinates	Azimuth: at least ±25° Elevation: at least ±15°

Max speed of absolute regulation of angular coordinates	at least 10°/sec
Resolution of absolute regulation of angular coordinates	Not worse that 0.01°

7 Simulation of primary targets

Inframet allows customer to choose types of simulated targets. Therefore the primary targets are basically customized products that fits customer preferences. However, as basic solution Inframet offers set of four types of primary targets: 1)helicopeter, 2)aircraft, 3)tank, 4)asteroid. Names, shapes and original dimensions of simulated primary targets are in Table 1.

Table 8.

Target name	Helicopter	Aircraft	Tank	Asteroid
Target shape	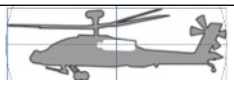		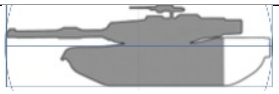	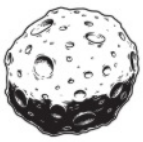
Dimensions of real target LxH [m]	15x4.8 m	19x5.1 m	8x2,5m	10x8km

Angular sizes of real target vary depending on distance from imager to the target. Therefore in order to enable simulation of targets at several distances Inframet delivers four sets of primary targets of different size: three helicopeter targets, four aircraft targets, four tank targets, three asteroid targets. Detail angular sizes of offered targets at different distances are in Table 2.

Table 9. Angular sizes of simulated primary targets at simulated distances

Target	Helicopter	Aircraft	Tank	Asteroid
Distance [km] *	Angular size [mrad]			
0.5			16x5	
1	15x4.8	19x5.1	8x2.5	10x8
2	7.5x2.4	9,5x2.5	4x1.25	5x4
5	3x0.96	3,8x1	1.6x0.5	2x1.5
10		1.9x0.51		1x0.8

* multiply distance by 1000 times in case of asteroid

Intensity of radiation emitted by different parts of real targets vary a lot, especially in MWIR band where dynamic can be as high as 20 times or more. Typical silhuette targets for MWIR-LWIR range manufactured by cutting holes in metal sheet offer only simulation of uniform targets because the manufacturing method enables only very rough regulation of target transmission: one or zero. Practically it means low realism of simulation. In order to improve realism of simulated targets Inframet had developed a new manufacturing method that allows:

1. divide target area into array of small pixels (pixel size about
2. step regulation (up to five steps) of transmission (attenuation) of each pixel.

It should be noticed that due to relatively large size of pixels the targets are optimal for testing of low/medium range imagers of equist frequency below 3.6 lp/mrad. However, it is typically not a problems as such imagers represent majority of thermal imagers offered on the market. Futher on, Inframet can optionally deliver optional Simag simulators capable to project images of target where pixel angular size is smaller.

It should be also noticed that manufacturing accuracy of target external shape is several times better comparing to pixel angular size (transmission map).

Table 10. Parameters of target manufacturing technology

Parameter	Value
Target concept	Array of pixels of step variable attenuation
Number of step attenuations	5
Minimal attenuation	About 1 (transmission about 1)
Maximal attenuation	About 16 (transmission about 0.06)
Pixel angular size (transmission map)	0.14mrad
Nequist frequency of tested imager	Below 3.6 lp/mrad

Manufacturing accuracy of target external shape	0.05 mrad

8 Simulation of secondary targets

Secondary targets are optional targets that simulates two scenarios: 1)flares ejected by military targets, 2)small parts of asteroids that brake away from main body. The secondary targets are manufactured as multi-pinhole targets that vary depending on number of pinholes, pinhole size and pixel location.

Table 11. Parameters of secondary targets

Parameter	Value
Manufacturing technology	Holes in metal sheet
Number of targets	4
Pinholes configurations	1)linear, 2)quasi circle
Pinhole size	1)0.5mrad, 2)0.25mrad

9 Regulation of radiation intensity of simulated primary targets

Regulation of radiation intensity of simulated targets is achieved by two ways:

1. changing transmission of different parts of primary target (regulation of relative effective differential exitance of different parts of primary targets),
2. regulation of temperature of radiation source (MTB blackbody) located behind the target (directly regulation of absolute effective differential exitance of part of highest transmission).

Effective differential exitance of different parts of primary target can be calculated using formula below

$$\Delta M_{ef}(T_{BB}) = \tau_{TAR}\cdot\tau_{COL}\cdot\tau_{IC}\cdot\varepsilon\cdot\int_{\Delta\lambda} M(T_{BB},\lambda)\,d\lambda - \tau_{TAR}\tau_{COL}\cdot\tau_{IC}\cdot\int_{\Delta\lambda} M(T_{AMB},\lambda)\,d\lambda \quad (1)$$

where ε is emissivity of radiation source, T_{BB} is temperature of the blackbody, τ_{TAR} is transmission of specific part of target area, τ_{COL} is transmission of collimator, τ_{IC} is transmission of image combiner, M is blackbody exitance according to Planck law, and Δλ is spectral band of imager (MWIR or LWIR).
In other words, this formula enables calculation of difference between exitance of specific part of target of transmission τ_{TAR} and exitance of the background (exitance of opaque part of target).
Effective differential exitance of the part of highest transmission – typically equal to one) can be continuously regulated by changing temperature of MTB blackbody. However, tt should be noticed that effective differential exitance of other parts can be only step regulated –the exitance depends not only on blackbody temperature but also on transmission levels of these parts.

10 Regulation of radiation intensity of simulated secondary targets

Regulation of radiation intensity of simulated secondary targets is achieved by regulation of temperature of radiation source (BHIR radiation source) located behind the target.

Effective differential exitance of secondary target can be calculated using formula below

$$\Delta M_{ef}(T_{RS}) = \tau_{COL}\cdot\tau_{IC}\cdot\varepsilon\cdot\int_{\Delta\lambda} M(T_{RS},\lambda)\,d\lambda - \tau_{COL}\cdot\tau_{IC}\cdot\int_{\Delta\lambda} M(T_{AMB},\lambda)\,d\lambda \quad (2)$$

where ε is emissivity of radiation source, T_{RS} is temperature of the radiation source, τ_{COL} is transmission of collimator, τ_{IC} is transmission of image combiner, M is blackbody exitance according to Planck law, and Δλ is spectral band of imager (MWIR or LWIR).
It should be noticed that secondary target is typically a group of pinholes. Therefore effective radiation intensity of this target can be also regualted by changing diameter of the pinholes.

11 Options

Inframet can optionally deliver also SIMAG simulator of expanded simulation capabilities:

1. Additional TCB-2D differnential blackbody
2. Simulator capable to simulate primary targets of continuously variable angular size

11.1 Additional TCB-2D differential blackbody

Very usefull option for simulation of primary targets of low differential temperature below say 50ºC. Such targets can be simulated using MTB blackbody but the blackbody is slow and unstable at such low temperatures.

11.2 Primary targets of continuously variable angular size

Typical Simag is capable to simulate primary targets of step variable angular size. A set of targers of different size is delivered.
Inframet can deliver special Simag capable to simulate primary targets of continuosly variable angular size. One target is delivered but angular size is regualated using zoom microscope objective. Simulation realism is significantly improved.

Version 1.1

CONTACT: Tel: +48 22 6668780 Fax: +48 22 3987244 Email: info@inframet.com